WELLMAN

PIN BUSH TYPE FLEXIBLE COUPLINGS

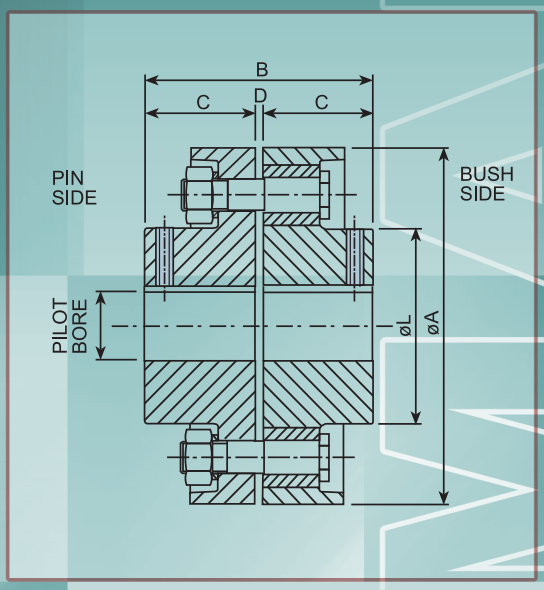

Size	KW per 100 RPM	Torque NM	Max. Speed RPM	Pilot Bore	Max. Bore	A	B	C	D	L
W1	0.82	77	6110	12.5	28	95	80	39	2	45
W2	3.20	301	5105	12.5	30	115	100	49	2	50
W2A	5.50	518	4395	15.7	43	130	102	50	2	67
W3	6.60	621	3605	15.7	49	160	104	50	4	74
W4	8.75	824	2995	20.0	65	190	124	60	4	104
W4A	13.30	1252	2995	20.0	65	190	124	60	4	104
W5	17.50	1648	2605	24.0	75	225	154	75	4	120
W6	25.00	2354	2300	45.0	95	255	184	90	4	151
W6A	31.00	2919	2300	45.0	95	255	184	90	4	151
W6B	37.00	3483	2300	45.0	95	255	184	90	4	151
MW7	44.00	4142	1955	60.0	115	291	232	114	4	185
MW7A	55.00	5178	1900	60.0	120	300	232	114	4	191
MW8	61.00	5743	1855	64.0	130	309	256	126	4	207
MW8A	77.00	7249	1655	64.0	135	341	266	131	4	215
MW8B	92.00	8662	1600	68.0	140	361	273	134	5	225
MW9	105.00	9885	1475	80.0	150	391	313	154	5	240
MW9A	140.00	13181	1405	85.0	160	409	335	165	5	255
MW10	152.00	14310	1300	100.0	170	441	367	181	5	271
MW10A	190.00	17888	1205	109.0	180	481	387	191	5	289
MW11	250.00	23537	1085	119.0	190	530	407	201	5	304
MW13	450.00	42366	1050	119.0	220	630	492	240	12	330
MW14	550.00	51781	950	119.0	250	710	532	260	12	375
MW15	650.00	61196	850	119.0	260	800	592	290	12	390
MW16	850.00	80025	850	119.0	260	810	590	290	10	390
MW17	1050.00	98854	750	119.0	260	850	610	300	10	390
MW18	1250.00	117684	750	119.0	260	900	650	320	10	390
MW19	1450.00	136513	650	150.0	290	950	650	320	10	440
MW20	1650.00	155343	650	150.0	290	1000	710	350	10	440
MW21	1850.00	174172	600	150.0	290	1100	710	350	10	440
MW22	2150.00	202416	600	200.0	300	1125	772	380	12	450
MW23	2450.00	230660	550	200.0	300	1200	812	400	12	450
MW24	2750.00	258904	550	200.0	300	1250	852	420	12	450

The WELLMAN Bush Type Flexible Coupling is of the cushioned drive type, transmitting the torque, through high tensile steel bolts to the machine input shaft. Highly developed rubber compounds are used in bushes to absorb shock loads, torsional vibrations and slight misalignments.

Simple and compact in construction, the WELLMAN Coupling is capable of transmitting high torques at maximum speeds. The flanges are manufactured with cast iron IS : 210 Gr. FG 200. This type of coupling permits drive in either direction and requires neither lubrication nor adjustment after fitting. The flexible bushes remain unaffected by water, dust and atmospheric conditions.

Powers for the standard couplings range from 0.82 kW to 2750 kW at 100 r.p.m. and sizes from W1 to MW24.

Example of Selection

A pin bush coupling is required to transmit 45 kW from an AC Electric motor which runs at 1440 r.p.m. to a centrifugal pump for 12 hours a day. The motor shaft is 60 mm diameter and the pump shaft is 55 mm diameter.

(A) SERVICE FACTOR –

From the table, service factor is 1.25

(B) DESIGN POWER –

Design power – 45×1.25 = 56.25 kW.

kW per 100 r.p.m.=56.25÷1440×100=3.90

(C) COUPLING SIZE –

By reading across the table on front page the first kW per 100 r.p.m. Figure to exceed the required 3.90 kW per 100 r.p.m. in Step (B) is 5.50. The coupling size is W2A.

(D) BORE SIZE –

From the table it can be seen that the shaft diameters does not fall within the max. bore range. Therefore we go into the higher sizes and select coupling size W4.

TYPICAL FACTORS FOR PIN BUSH COUPLING

Class of Machine		Factor
Agitator		2
Calendar		3
Cement Mill and Kiln		3
Conveyor :	Horizontal	1.0
:	Inclined	1.5
Couches :		2.5
Crane motions :		
a)(Classes 3 & 4)	Hoist	4
	Long travel	3
	Cross traverse	3
b) (Classes 1&2)	Hoist	3
	Long Travel	2.5
	Cross traverse	2.5
Electric Generator (Steady load)		1.75
Fan :	Cooling tower	2.5
	Industrial	2.0
	Mine	2.5
Haulage		3
Line shafting		2
Machine Tool :	Reversing	3.0
	Other	1.5
Paper Mill :		2 to 4+
Pumps :	Centrifugal	1.25
	Rotary	2
	Reciprocating	3
Rock Crushers		4
Rubber Mill :	Rubber Mixer	3
Steel Work Drives		2 to 5+
Turbine Driven Generators		1.25
Rolling Mills, Motor Driven without Flywheel		4

+ Depending upon specific application.

WELLMAN WACOMA LIMITED

Thermal & Mechanical Power Transmission Engineers

Tivoli Park, Bunglow No. 5, 225 B, A.J.C. Bose Road, Kolkata - 700020
Tel: 91-33-2283-7389/6042, 91-33-32477552; Fax: 91-33-2283-6080
E-mail: wellmanwacoma@wellmanwacoma.com, wacoma@giascl01.vsnl.net.in

Bengalaru
No. 7/2, Main Muneshwara Temple Street,Hebbal, Kempapura, Bengalaru - 560024
Tel: 91-80-2343-0947; Fax: 91-80-2333-6196
E-mail: bangalore@wellmanwacoma.com, wellman_efrel@yahoo.co.in

Mumbai
Satyabhama Nivas, Tribhuvan Road, Mumbai - 400004
Tel: 91-22-23860887 (off); Mobile: 09821132264
E-mail: mumbai@wellmanwacoma.com, knd72@yahoo.com

Delhi
Flat No. 1218, Devika Tower, Nehru Place New Delhi - 110019
Tel: 91-11-2644-5017; Fax: 91-11-2644-5018
E-mail: delhi@wellmanwacoma.com, wellmandelhi@yahoo.com

Pune
Ambience Enterprise C-12 Roshma Residency, Vimannagar, Pune - 411014
Tel: +91- 020 - 40027204; Mobile: +91-9822833399; Fax: +91- 020 - 26630633
E-mail: pune@wellmanwacoma.com, ambience_enterprise@yahoo.co.in

Website: www.wellmanwacoma.com

Accredited by Member of the IAF MLA for QMS